MSB1 1/10 2WD Electric Buggy

B2001 Ver. 2404

Driver : Kenji Tsuruta
Date : 2025/04/09
Track : CARNOSA RC PARK
Event :

Track Condition
Size : Open ☐ Mid ☐ Tight ☒
Traction : High ☐ Mid ☒ Low ☐
Condition : Smooth ☒ Bumpy ☐ Dry ☐ Wet ☐
Surface : Carpet ☒ Dirt ☐ Astroturf ☐

Front Suspention

Ride Height : 14mm
Camber : 1.5°
Toe : -0.5°
Anti-roll Bar : 1.1mm
Front Bulkhead Spacer :
Plastic 1 mm / Brass 1 mm
Shock Pivot Ball Position :
Fwd ☒ Back ☐

All aluminum steering parts
B2706, B2707, B2708, B2709

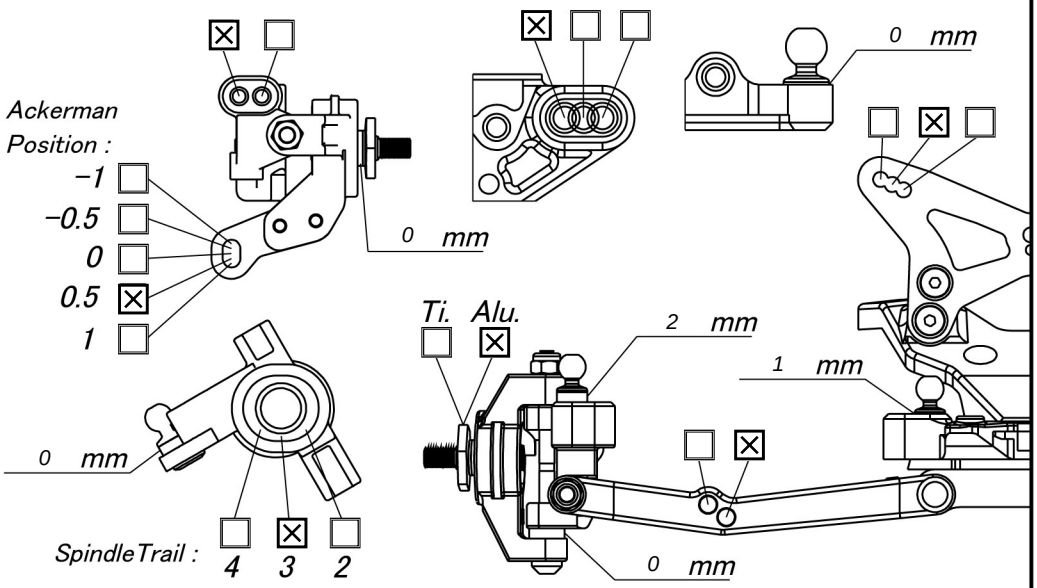

Rear Suspention

Ride Height : 14mm
Camber : 2°
Anti-roll Bar : 1.3mm
Arm Position : Fwd ☒ Back ☐
Hub Position : Fwd ☐ Mid ☒ Back ☐
Shock Pivot Ball Position :
Fwd ☒ Back ☐

B2801シャーシブレース両サイドカット
ウイングマウントスペーサー5mm追加

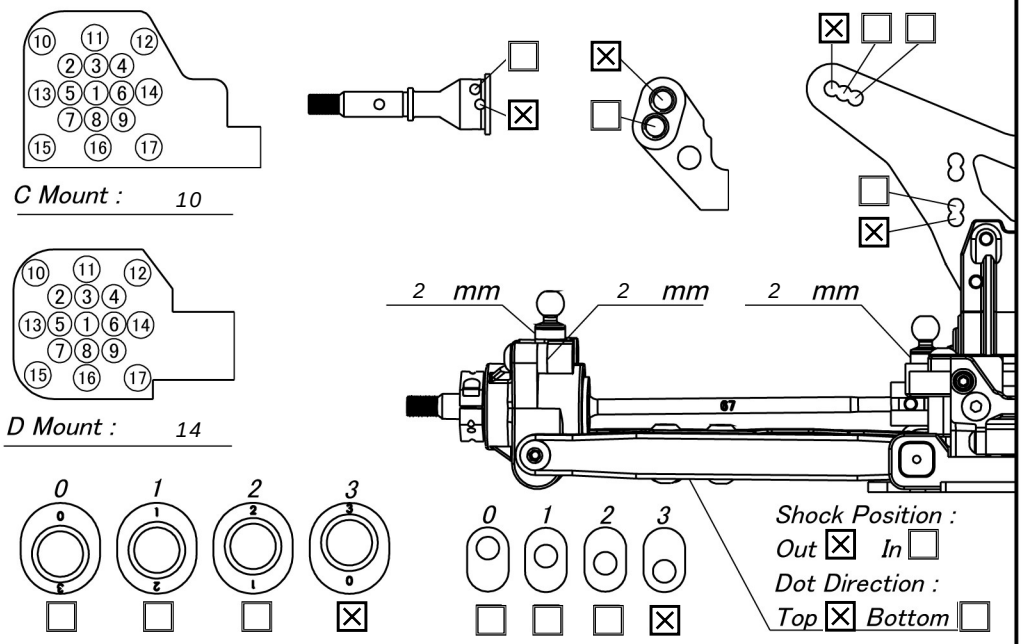

Shocks	Front	Rear
Piston :	1.6x2	1.7x2
Oil :	500	400
Spring :	3dot	3dot
Length :	24mm	29mm
Limiters :	Int : 1 Ext : 2	Int : Ext :
Eyelet Lenght :	Std ☒ +2 ☐	Std ☐ +2 ☒
Cup Offset :	Low ☐ Mid ☐ High ☒	Low ☐ Mid ☒ High ☐

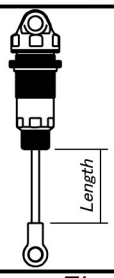

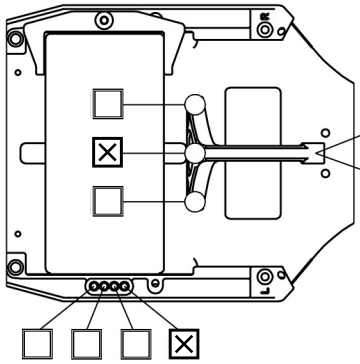

Chassis Brace Bush Type :
☐ Plastic
☒ Rubber

ESC Plate :
☐ Plastic
☐ Carbon
☒ Brass

Total Weight : 1510 g

Electronics	
Radio :	10PX
Servo :	CB700
ESC :	HW
Motor :	HW17.5
Gearing :	72 / 26
Battery :	RICKSIDE / 160 g

Weight	
Servo Weight :	Yes ☐ No ☒
Battery Weight :	19g ☒ 37g ☐

Differential			
Gear Diff : ☒	2 Gear : ☐	Oil	50000
	4 Gear : ☒	Friction O-ring :	
Ball Diff : ☐	Setting		

Tire	Front	Rear
Type :	SPLINTER	CACTUS
Compound :	YELLOW	YELLOW
Inserts :	REAR CUT 1/2	REAR
Wheel :	B2909W	B2902W
Additive :		

Body & Wing			
Body :	B2910 Ligt weight body		
Wing :	VP WN-004LW		
Wing Angle :	0° ☐	3° ☒	6° ☐
Front Wing :		Low : ☐	High : ☐